2N6059

SILICON NPN POWER DARLINGTON TRANSISTOR

- STMicrolectronics PREFERRED SALESTYPE
- HIGH GAIN
- NPN DARLINGTON
- HIGH CURRENT
- HIGH DISSIPATION
- INTEGRATED ANTIPARALLEL COLLECTOR-EMITTER DIODE

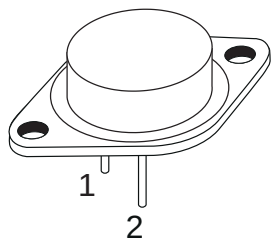

TO-3

APPLICATIONS

- LINEAR AND SWITCHING INDUSTRIAL EQUIPMENT

DESCRIPTION

The 2N6059 is a silicon Epitaxial-Base NPN transistor in monolithic Darlington configuration mounted in Jedec TO-3 metal case.

It is inteded for use in power linear and low frequency switching applications.

INTERNAL SCHEMATIC DIAGRAM

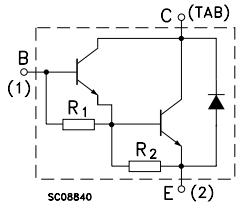

R_1 Typ. = 6 KΩ R_2 Typ. = 55 Ω

ABSOLUTE MAXIMUM RATINGS

Symbol	Parameter	Value	Unit
V_{CBO}	Collector-Base Voltage (I_E = 0)	100	V
V_{CEX}	Collector-Emitter Voltage (V_{BE} = -1.5V)	100	V
V_{CEO}	Collector-Emitter Voltage (I_B = 0)	100	V
V_{EBO}	Emitter-Base Voltage (I_C = 0)	5	V
I_C	Collector Current	12	A
I_{CM}	Collector Peak Current (t_p < 5 ms)	20	A
I_B	Base Current	0.2	A
P_{tot}	Total Dissipation at $T_c \leq 25\ ^oC$	150	W
T_{stg}	Storage Temperature	-65 to 200	^oC
T_j	Max. Operating Junction Temperature	200	^oC

Obsolete Product(s) - Obsolete Product(s)

THERMAL DATA

$R_{thj-case}$	Thermal Resistance Junction-case	Max	1.17	$^oC/W$

ELECTRICAL CHARACTERISTICS (T_{case} = 25 ^oC unless otherwise specified)

Symbol	Parameter	Test Conditions	Min.	Typ.	Max.	Unit
I_{CEX}	Collector Cut-off Current (V_{BE} = -1.5V)	V_{CE} = rated V_{CEX} V_{CE} = rated V_{CEX} T_c = 150 ^oC			0.5 5	mA mA
I_{CEO}	Collector Cut-off Current (I_B = 0)	V_{CE} = 50 V			1	mA
I_{EBO}	Emitter Cut-off Current (I_C = 0)	V_{EB} = 5 V			2	mA
$V_{CEO(sus)}$*	Collector-Emitter Sustaining Voltage (I_B = 0)	I_C = 100 mA	100			V
$V_{CE(sat)}$*	Collector-Emitter Saturation Voltage	I_C = 6 A I_B = 24 mA I_C = 12 A I_B = 120 mA			2 3	V V
$V_{BE(sat)}$*	Base-Emitter Saturation Voltage	I_C = 12 A I_B = 120 mA			4	V
V_{BE}*	Base-Emitter Voltage	I_C = 6 A V_{CE} = 3 V			2.8	V
h_{FE}*	DC Current Gain	I_C = 6 A V_{CE} = 3 V I_C = 12 A V_{CE} = 3 V	750 100			
f_T	Transition frequency	I_C = 5 A V_{CE} = 3 V f =1 MHz	4			MHz

* Pulsed: Pulse duration = 300 µs, duty cycle 1.5 %

Obsolete Product(s) - Obsolete Product(s)

TO-3 MECHANICAL DATA

DIM.	mm			inch		
	MIN.	TYP.	MAX.	MIN.	TYP.	MAX.
A	11.00		13.10	0.433		0.516
B	0.97		1.15	0.038		0.045
C	1.50		1.65	0.059		0.065
D	8.32		8.92	0.327		0.351
E	19.00		20.00	0.748		0.787
G	10.70		11.10	0.421		0.437
N	16.50		17.20	0.649		0.677
P	25.00		26.00	0.984		1.023
R	4.00		4.09	0.157		0.161
U	38.50		39.30	1.515		1.547
V	30.00		30.30	1.187		1.193

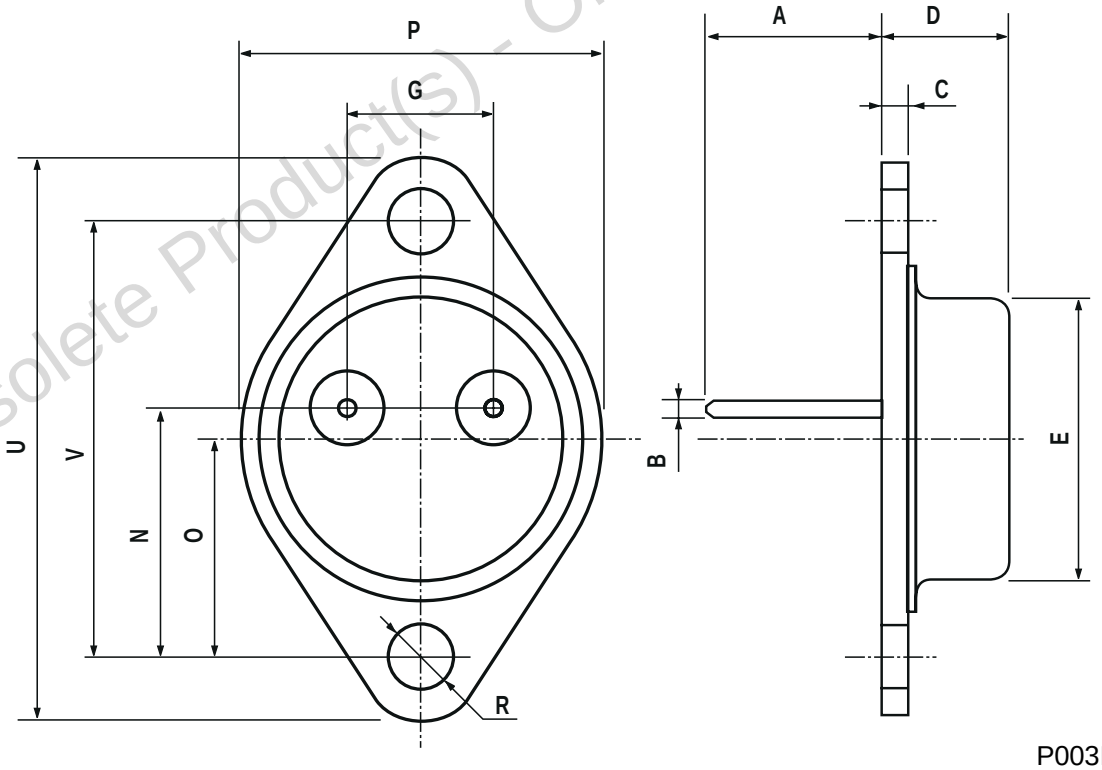

P003F

Obsolete Product(s) - Obsolete Product(s)

Obsolete Product(s) - Obsolete Product(s)

Information furnished is believed to be accurate and reliable. However, STMicroelectronics assumes no responsibility for the consequences of use of such information nor for any infringement of patents or other rights of third parties which may result from its use. No license is granted by implication or otherwise under any patent or patent rights of STMicroelectronics. Specification mentioned in this publication are subject to change without notice. This publication supersedes and replaces all information previously supplied. STMicroelectronics products are not authorized for use as critical components in life support devices or systems without express written approval of STMicroelectronics.

The ST logo is a trademark of STMicroelectronics

© 2003 STMicroelectronics – Printed in Italy – All Rights Reserved

STMicroelectronics GROUP OF COMPANIES

Australia - Brazil - Canada - China - Finland - France - Germany - Hong Kong - India - Israel - Italy - Japan - Malaysia - Malta - Morocco - Singapore - Spain - Sweden - Switzerland - United Kingdom - United States.

http://www.st.com